PRODUCT INFORMATION

CVD - COMPACT AND EASY

For the use with IBCs, barrels and smallest containers

COST-EFFECTIVE DOSING SYSTEMS IN A COMPACT DESIGN

sera CVD – STANDARDIZED AND YET FLEXIBLE

The CVD system (Compact Vertical Dosing) is a technically mature standard product offering a high degree of flexibility in its application. Its suitability for many different dosing applications as well as its efficiency and short-term availability are impressive. The completely modular design allows you to customise – just like a building set – the functions of the system to your individual dosing requirements. You can also choose from a number of optional accessories such as the pulsation damper or the terminal boxes for the electrical power supply.

In addition, the optional safety upgrades such as the collecting basins, splash guards or leakage sensors do their part for the protection of the environment and the occupational health and safety in your company.

THE sera "PLUG AND DOSE" PRINCIPLE

Once you have decided on a new dosing system, you want to integrate it quickly and smoothly into your process. For this reason, we make a point of reducing the time and effort for the installation and commissioning to a minimum when we develop our dosing systems. To ensure this, the CVD systems come with clearly defined interfaces for the connection to suction & discharge pipes . The sophisticated design of the system allows the valves and components to be easily retrofitted or replaced without any costly modifications after the commissioning.

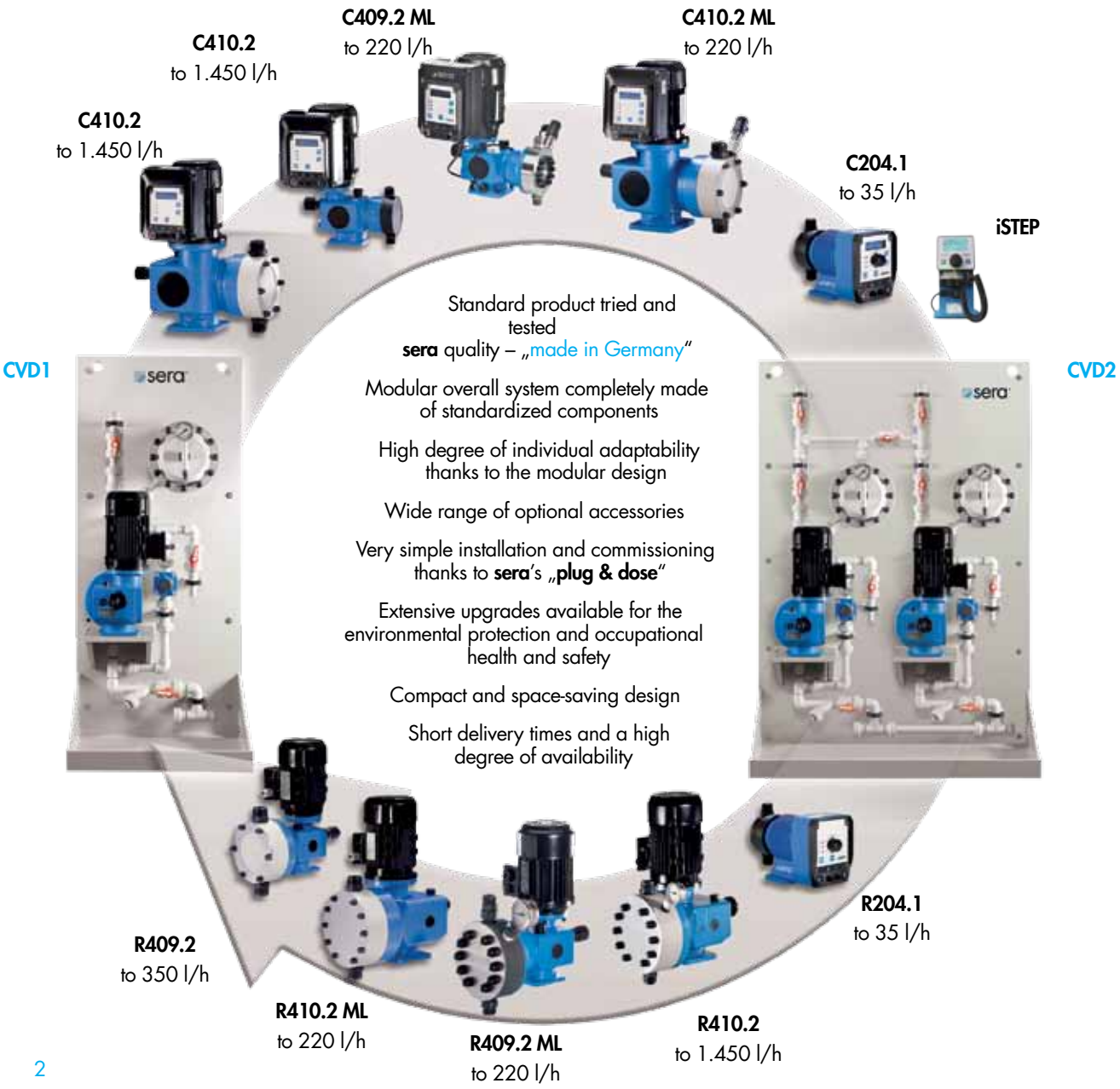

APPLICATION EXAMPLES

TREATMENT OF COOLING WATER

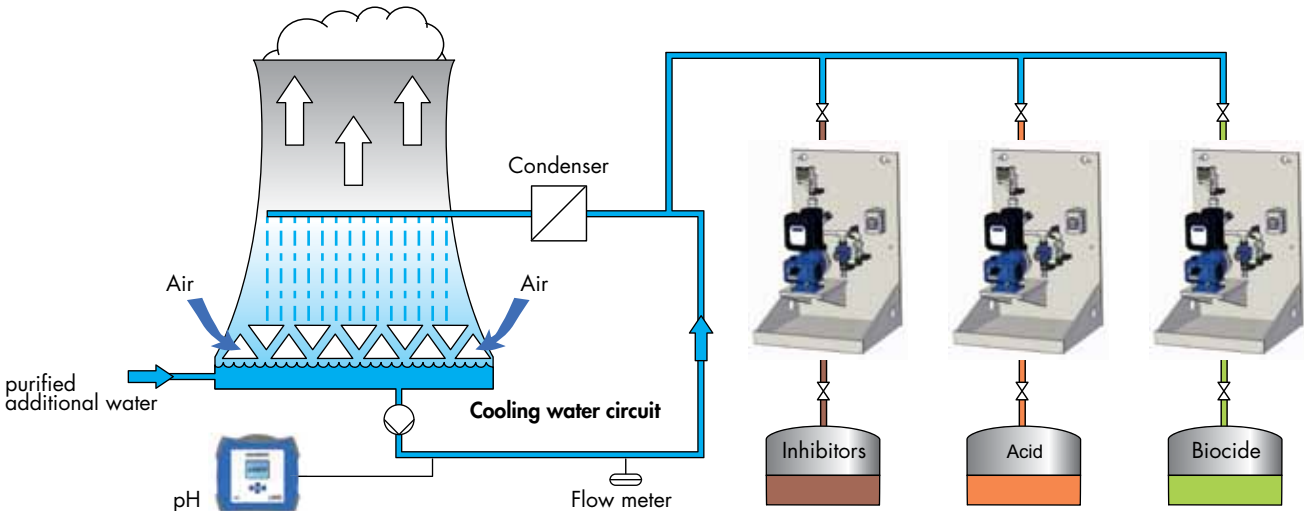

CIP CLEANING IN THE BEVERAGE AND FOOD INDUSTRY

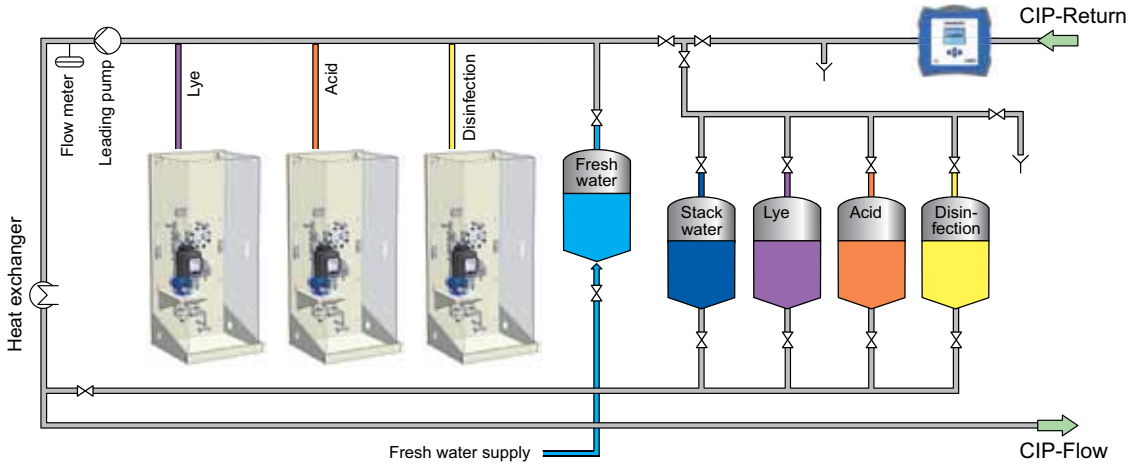

PHOSPHATE PRECIPITATION IN SEWAGE TREATMENT PLANT

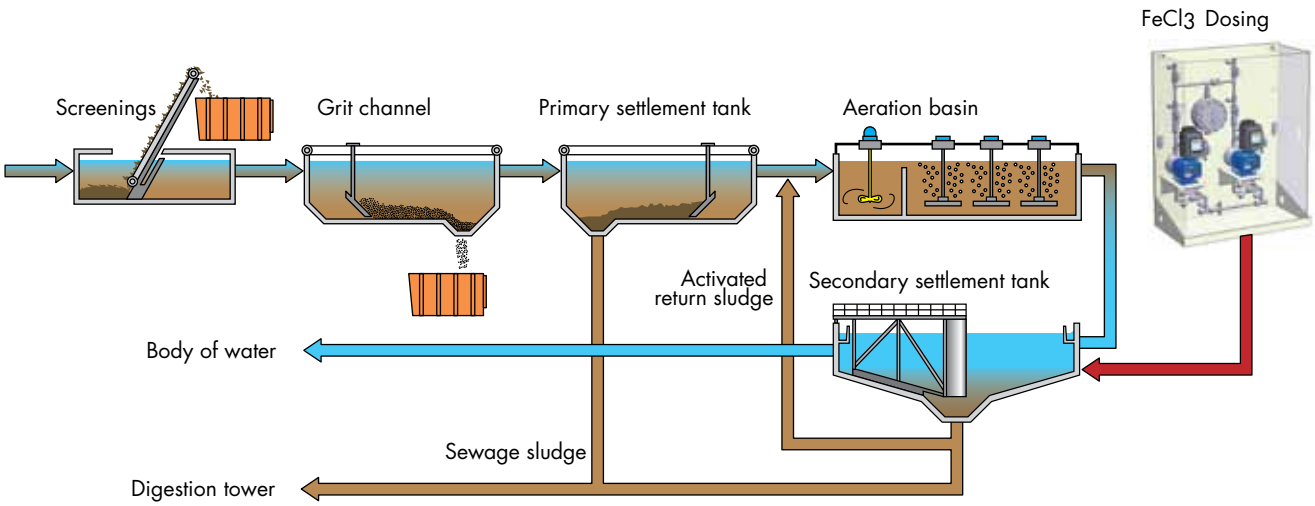

OPTIONS CVD 1/ CVD 1s

DOSING PUMPS

Solenoid diaphragm pumps
Series 204.1

Diaphragm pumps
Series 409.2

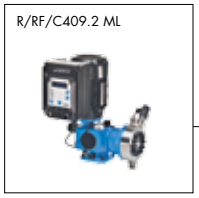

Diaphragm pumps
Series 410.2

OPTIONS DOSING UNIT

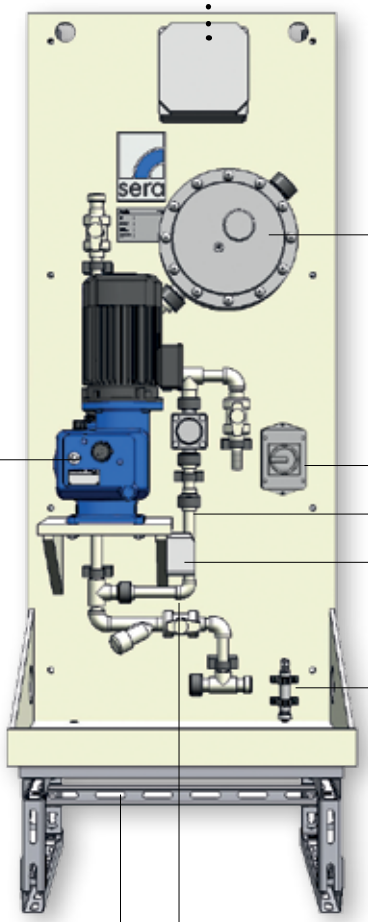

Multi functional device (without fig.)

Terminal box

Protective roof for driving motor

(without fig.)

Diaphragm pulsation damper

Main switch

Pipework relief valve back to suction side
(only in combination with suction side pipework)

Power outlet

Leakage sensor with/without WHG admission

Framework for ground installation
Steel (galvanized) or plastic

Pipework suction side

with ball-cock and line strainer

removable splash guard

(without fig.)

OPTIONS CVD 2 (STANDBY - INSTALLATION)

DOSING PUMPS

Solenoid diaphragm pumps
Series 204.1

Diaphragm pumps
Series 409.2

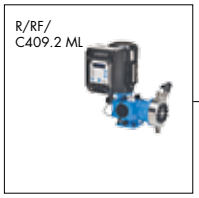

Diaphragm pumps
Series 410.2

OPTIONS DOSING UNIT

Multi functional device (without fig.)

Pressure side connecting pipe

between pump 1 and pump 2

Terminal box

Protective roof for driving motor

(without fig.)

Diaphragm-pulsation damper

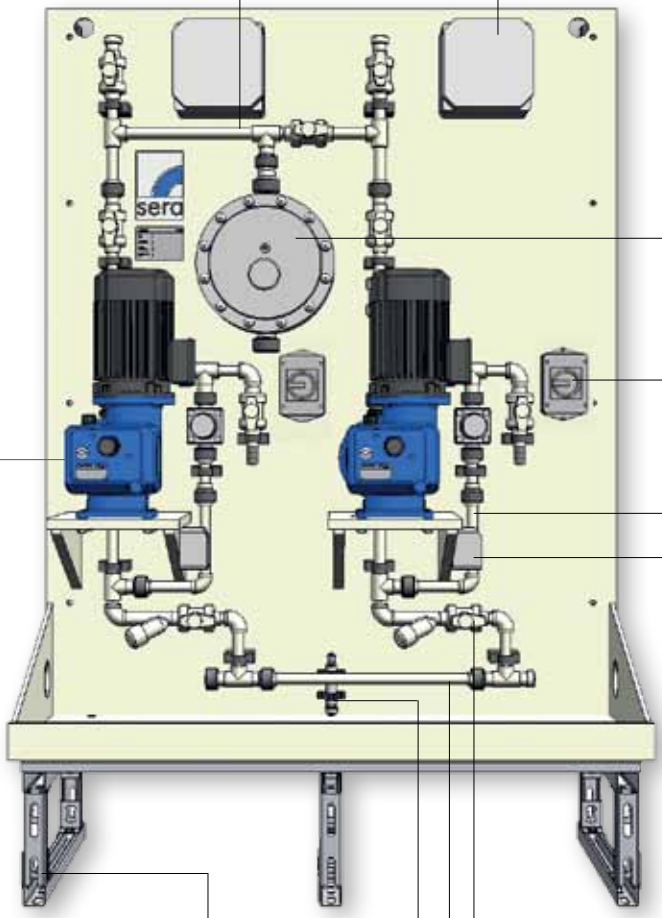

Main switch

(1 at a time for each pump)

Pipework suction side

with ball-cock and line strainer
(1 at a time for each pump)

Power outlet

(1 at a time for each pump)

Pipework suction side

with ball-cock and line strainer
(1 at a time for each pump)

Framework for ground installa-tion

Steel (galvanized) or plastic

Leakage sensor with/without WHG admission

Suction side connecting pipe

between pump 1 and pump 2

removable splash guard

(without fig.)

OPTIONS CVD 2 (2 X 100% - INSTALLATION)

DOSING PUMPS

Solenoid diaphragm pumps
Series 204.1

Diaphragm pumps
Series 409.2

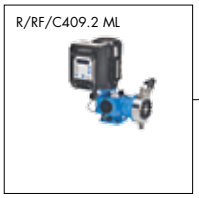

Diaphragm pumps
Series 410.2

OPTIONS DOSING UNIT

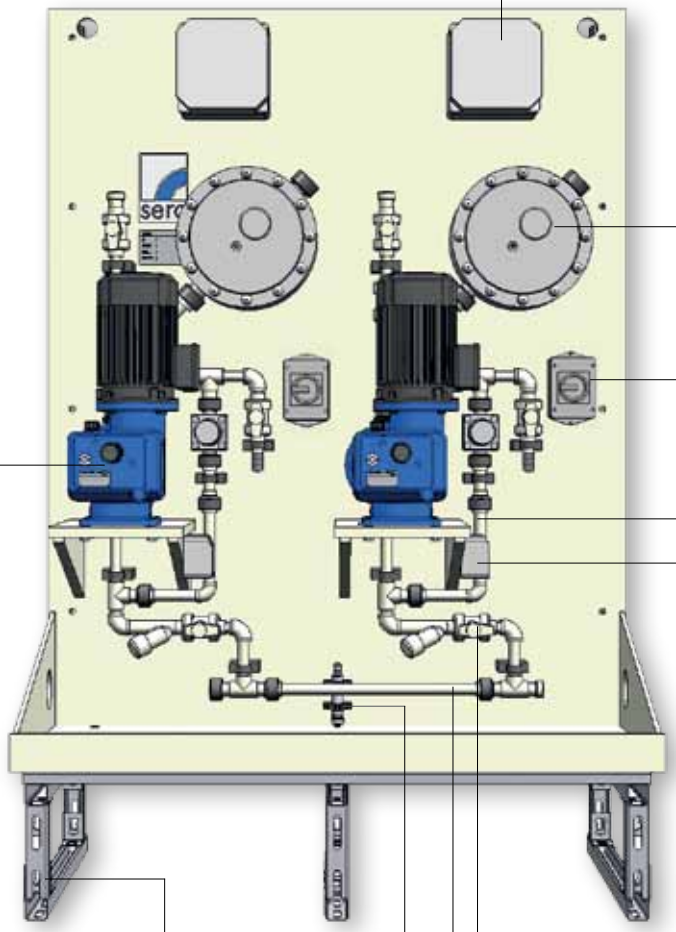

Multi functional device (without fig.)

Terminal box

Protective roof for driving motor (without fig.)

Diaphragm-pulsation damper

Main switch (1 at a time for each pump)

Pipework relief valve back to suction side (only in combination with suction side pipework; 1 at a time for each pump)

Power outlet (1 at a time for each pump)

Pipework suction side with ball-cock and line strainer (1 at a time for each pump)

Framework for ground installation Steel (galvanized) or plastic

Leakage sensor with/without WHG admission

Suction side connecting pipe between pump 1 and pump 2

removable splash guard (without fig.)

CVD TECHNICAL DATA

CVD 1/ CVD1s

Type	Flow rate	admissible counter-pressure*	admissible suction height	Quantity of pumps	Pump series		
	l/h	bar	mWS				
CVD 1 - 60.1	up to max. 60	up to 10	up to 3	1	R/C204.1- 0,4e R/RF/C 409.2-0,4e R/RF/C410.2-11ML iSTEP	... ...	R/C204.1-35e R/RF/C409.2-50e R/RF/C410.2-45ML
CVD 1 - 550.1	up to max. 550	up to 10	up to 3	1	R/RF/C409.275e R/RF/C410.2-200e R/RF/C409.2-72ML iSTEP	... ...	R/RF/C409.2-350e R/RF/C410.2-570e R/RF/C410.2-500ML
CVD 1 - 1500.1	up to max. 1450	up to 6	up to 3	1	R/RF/C 410.2- 570 R/RF/C410.2-940ML iSTEP	... ...	R/RF/C 410.2- 1450 R/RF/C410.2-1200ML

CVD 2

Type	Flow rate	admissible counter-pressure*	admissible suction height	Quantity of pumps	Pump series		
	l/h	bar	mWS				
CVD 2 - 60.1	up to 2 x max. 60	up to 10	up to 3	2	R/C204.1- 0,4e R/RF/C 409.2-0,4e R/RF/C410.2-11ML iSTEP S	... ...	R/C204.1-35e R/RF/C409.2-50e R/RF/C410.2-45ML
CVD 2 - 550.1	up to 2 x max. 550	up to 10	up to 3	2	R/RF/C409.275e R/RF/C410.2-200e R/RF/C409.2-72ML iSTEP S	... ...	R/RF/C409.2-350e R/RF/C410.2-570e R/RF/C410.2-500ML
CVD 2 - 1500.1	bis 2 x max. 1450	bis max. 6	bis 3	2	R/RF/C 410.2- 570 R/RF/C410.2-940ML iSTEP S	... ...	R/RF/C 410.2- 1450 R/RF/C410.2-1200ML

*) please note the max. admissible counter pressure of the chosen dosing pump!

CVD 1 DIMENSIONS

CVD 1
Outer dimensions (basic design with options)

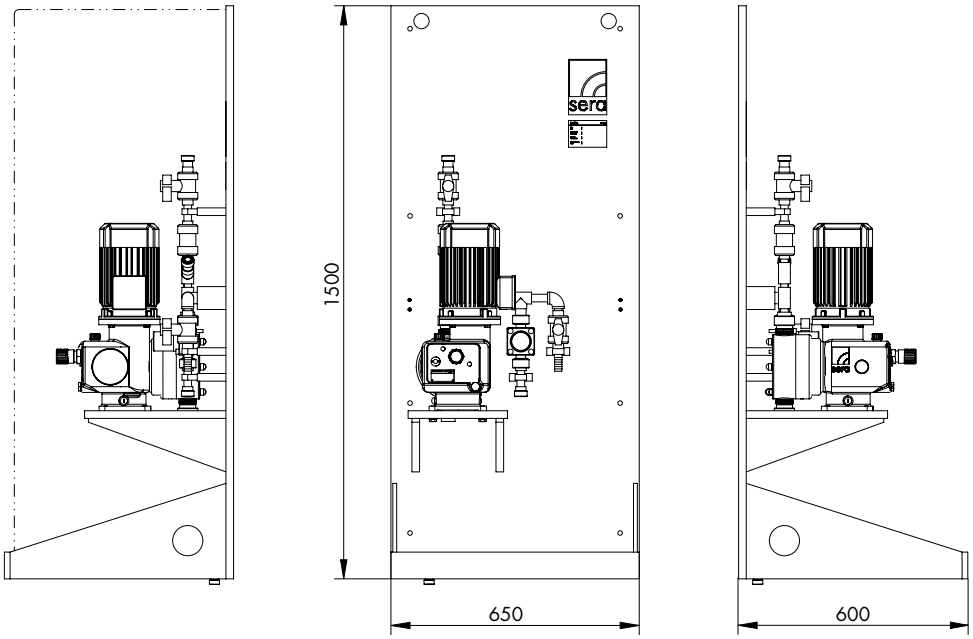

with framework f. ground installation (FRP, option)

with framework f. ground installation (galvanized steel, option)

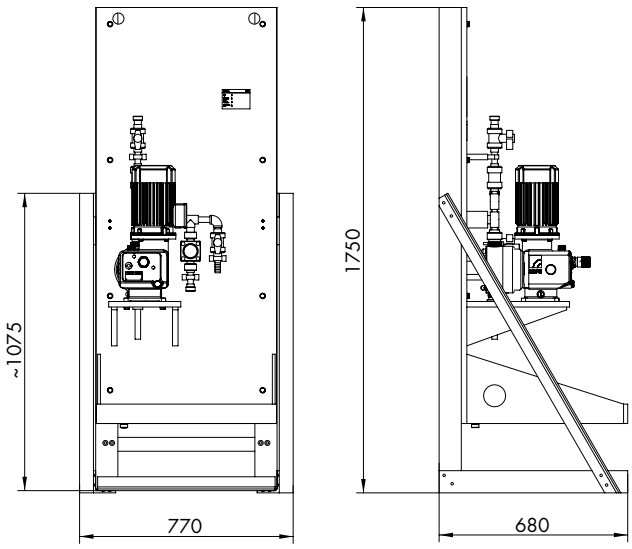

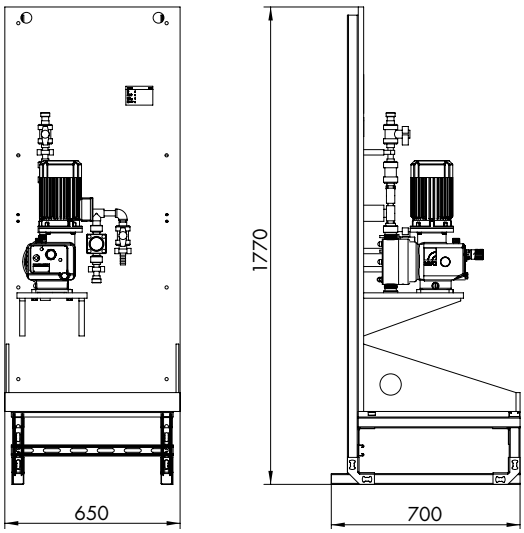

CVD 1s DIMENSIONS

CVD 1s
Outer dimensions (basic design with options)

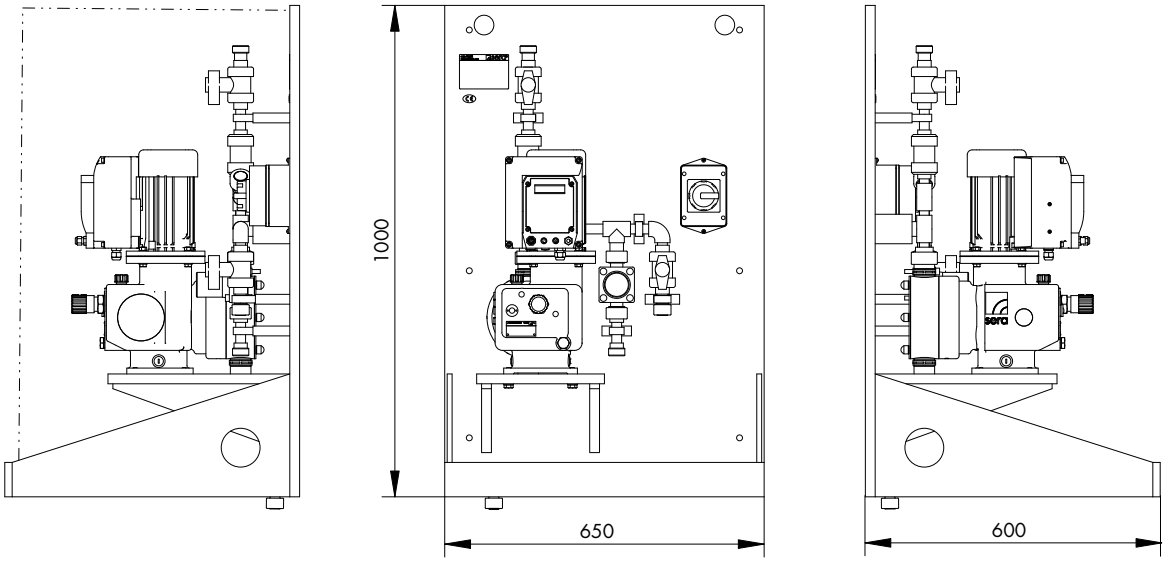

with framework f. ground installation (FRP, option)

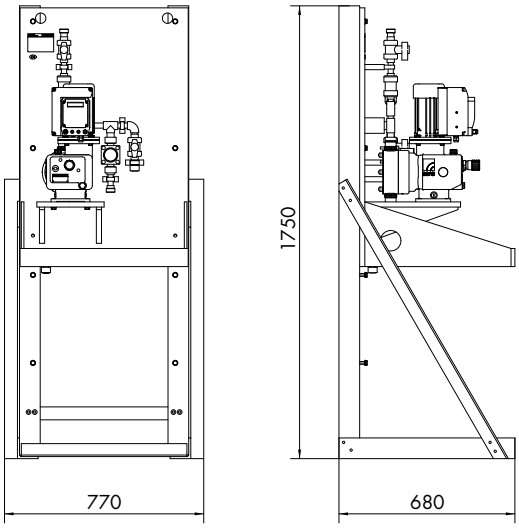

with framework f. ground installation (galvanized steel, option)

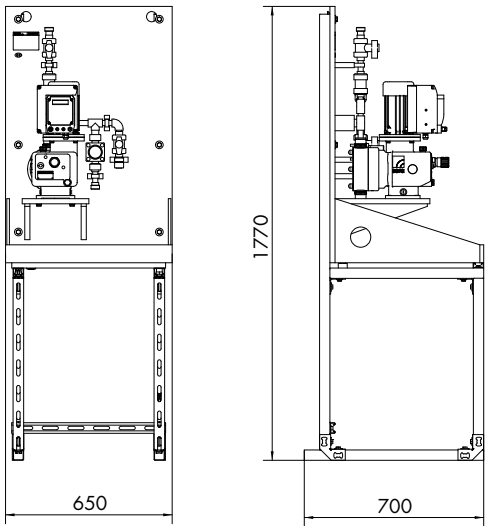

CVD 2 DIMENSIONS

CVD 2
Outer dimensions (basic design with options)

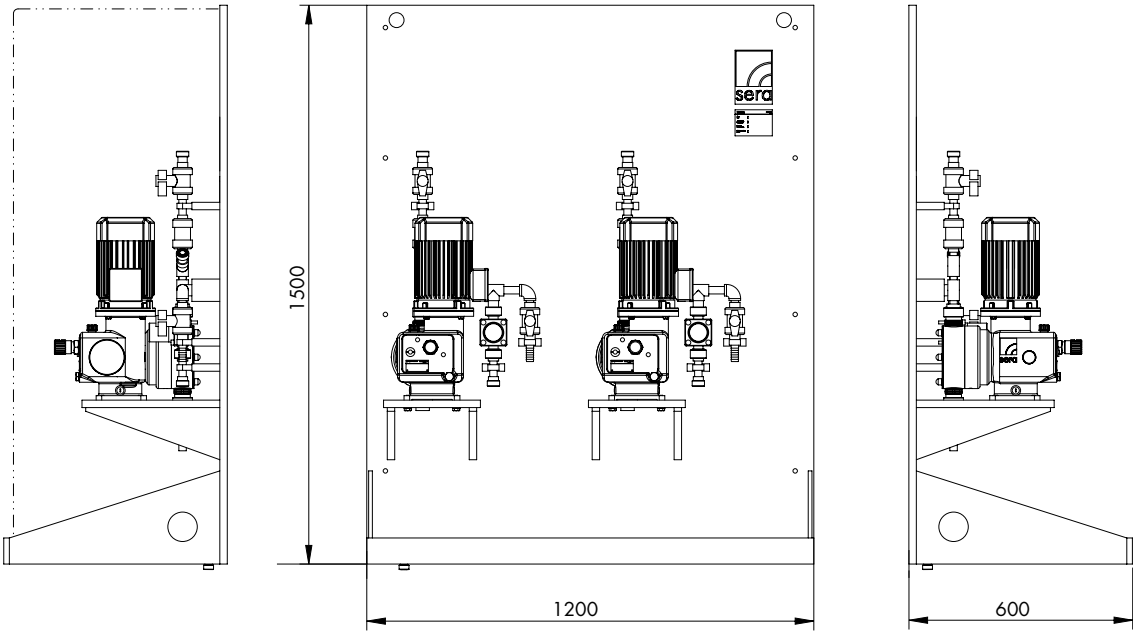

with framework f. ground installation (FRP, option)

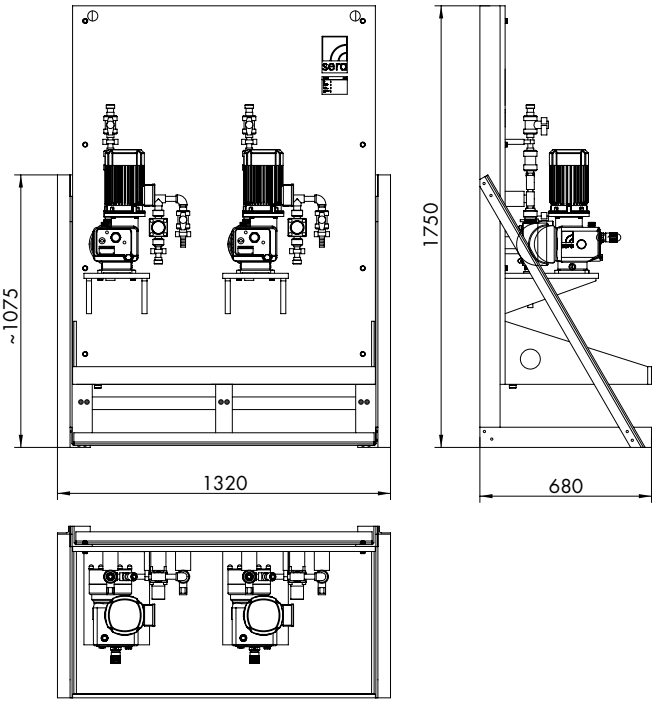

with framework f. ground installation (galvanized steel, option)

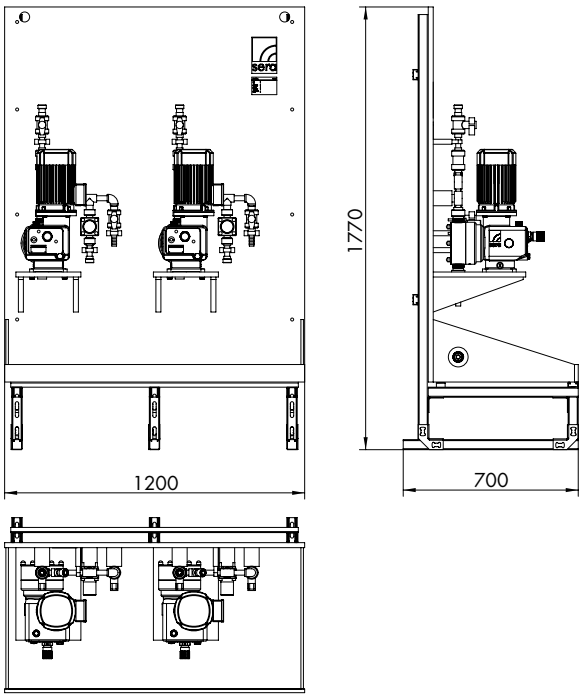

EXTENSIVE ACCESSORIES

OPTIONS AND ACCESSORIES FOR sera CVD1, CVD1s AND CVD2

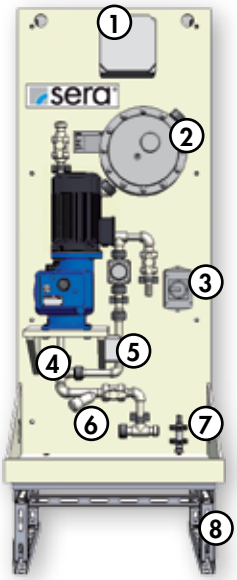

1. Terminal box
2. Diaphragm pulsation damper
3. Main switch
4. Piping from overflow valve back into the suction pipe
   (Only in connection with piping on the suction side)
5. Socket
6. Piping suction side with ball cock and line strainer
7. Leakage sensor
8. Frame for floor mounting of steel (galvanised) or glass fibre reinforced plastic
9. Splash guard
10. Filling pump FLP2
11. Hand vacuum pump

- Protective roof for driving motor (without picture)
- Connection kit Flow meter (without picture)
- Optical flow controller (without picture)
- Draining-/Flushing-ball cock (without picture)
- Measuring device 45° (without picture)
- Drain cock drip pan (without picture)
- GEKA-coupling for flushing valve (without picture)

SUCTION AIDS, INJECTION POINTS, DOSING VALVES, SUCTION LANCES

- Suction lances with and without level switch, with protecting tube
- Injection points with injection lance for better mixing
- Dosing valves

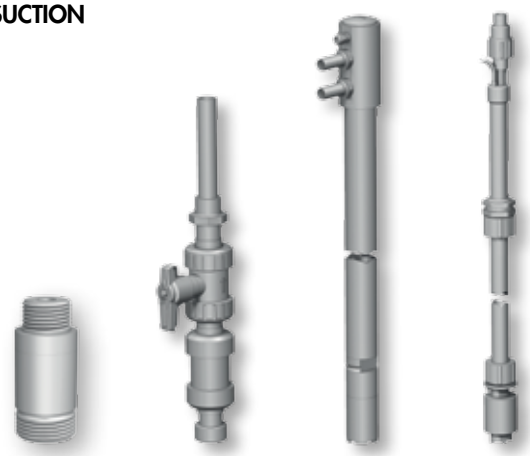

CONTAINERS / TANKS

- Container made of UV-stabilised polyethylene, from 35 – 1,000 l, food safe, central mounting bracket, sintered litre scale, connection for draining

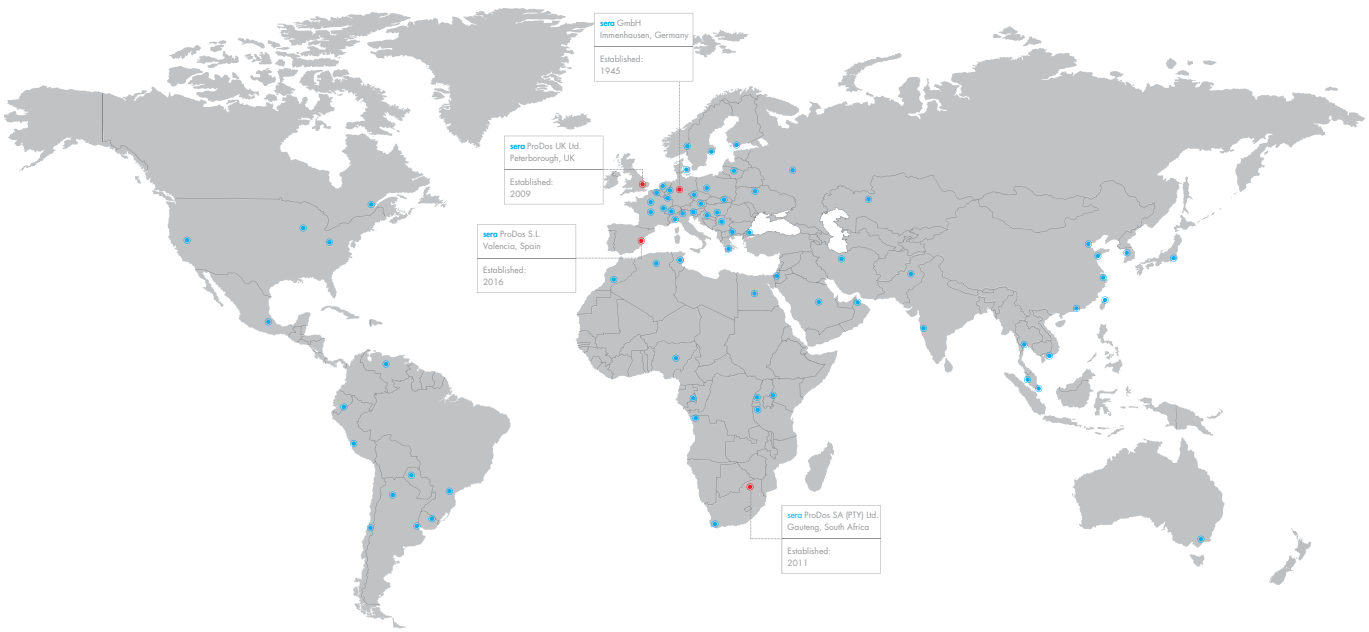

WORLDWIDE.

With a headquarter in Germany and local offices in England, Spain and South Africa and a worldwide sales and service network with more than 30 foreign representatives in more than 80 countries across all continents, **sera** guarantees optimum support for customers locally.

Local sera contact

sera ProDOs GmbH
sera-Str. 1
34376 Immenhausen
Germany
Tel. +49 5673 999 02
Fax +49 5673 999 03
info-prodos@sera-web.com
www.sera-web.com